$
1000 - 90.00

INSTRUCTION PAMPHLET U-5008

April, 1928

MAINTENANCE

OF

STYLE "T-2" D. C. SIGNALS

Slot Magnet with Pick-up and Holding Windings in Series. Slot Contact for Motor Circuit

Reprint-2

UNION SWITCH & SIGNAL CO.
SWISSVALE, PA.

8647

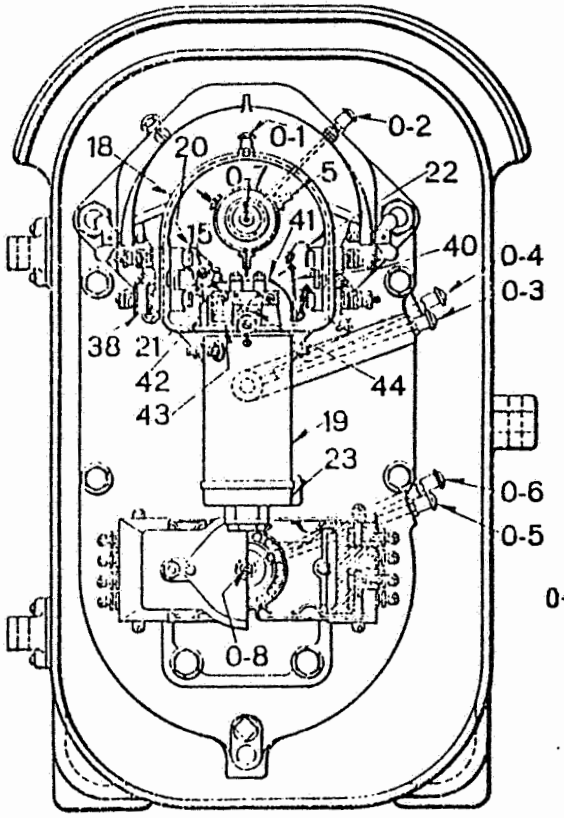

FIG.A

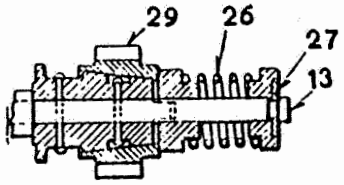

FIG.C

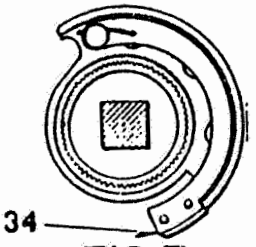

FIG.D

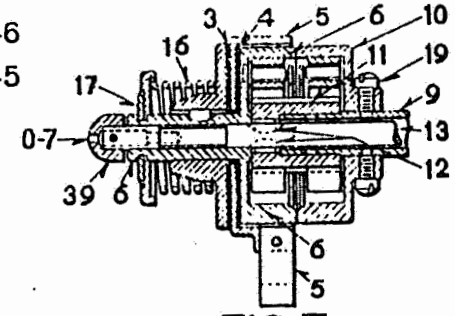

FIG.E

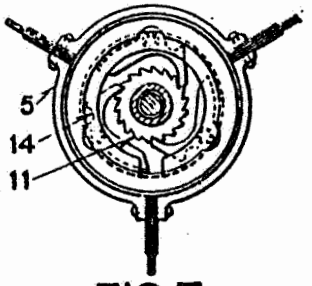

FIG.F

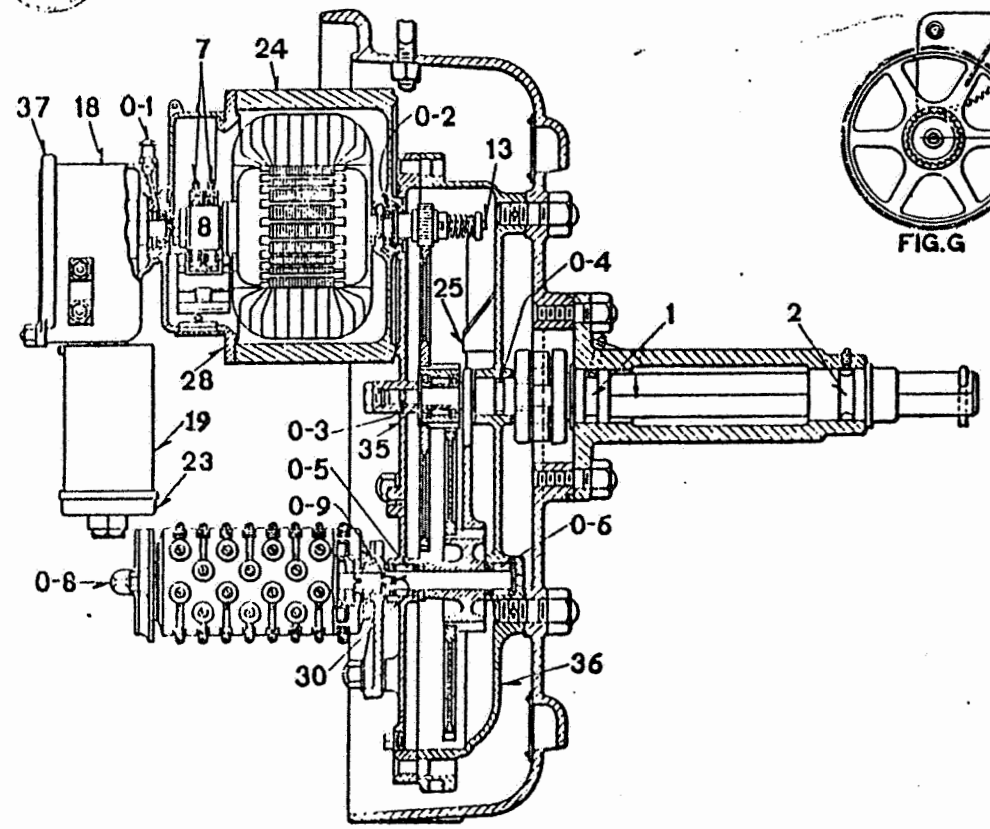

FIG.B

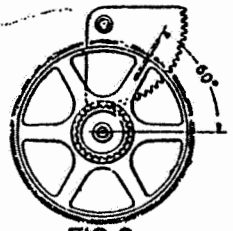

FIG.G

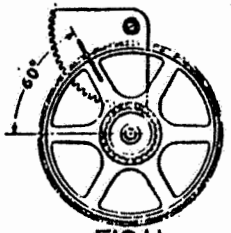

FIG.H

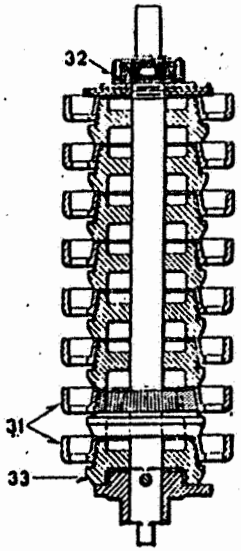

FIG.J

8648

UNION SWITCH & SIGNAL COMPANY
Swissvale, Pa.

MAINTENANCE OF STYLE "T-2" D. C. SIGNALS

Slot Magnet with Pick-up and Holding Windings in Series. Slot Contact for Motor Circuit

1. General

Care should be exercised to protect all parts of the mechanism against exposure and also to prevent foreign substances getting into parts where they might cause trouble.

2. Lubrication

Avoid using too much oil. All principal bearings, except on semaphore shaft, are either ball or roller type, and need very little oil.

Union Non-Freezing Lubricating Oil (Spec. 1093), or some other high grade light oil, free from acid, should be used.

Motor bearings should be oiled once a month, using five drops in each of the holes marked 0-1, 0-2, and 0-7 in Figs. A, B and E.

Gear Bearings should be oiled once in three months through holes 0-3, 0-4, 0-5 and 0-6, in Figs. A and B.

Circuit Controller Bearings should be oiled once in three months through holes 0-8 and 0-9, Figs. A and B. A drop of oil rubbed over the surface of the segments at frequent intervals will reduce both friction and wear on these parts. By the use of a good non-freezing oil, troubles from frost on contacts may be avoided. If contacting surfaces are kept clean, the

oil will be beneficial, but if dirt is allowed to collect so as to form a paste or gum, trouble will develop.

Semaphore shaft bearings have pockets 1 and 2, Fig. B, filled at the factory with Tulc, and unless excessive friction is evident, the grease need not be renewed more than once a year. When renewing the grease, either SVH Tulc, or Dixon's Semaphore Lubricant (graphite) may be used. This should be applied by means of a grease gun, so that the grease will be forced into pockets 1 and 2 until it begins to ooze out at the end of the journal. If graphite is used, it must be kept soft by adding oil to the bearings every three months.

The cone clutch, Fig. C between motor shaft and pinion gear, must be kept absolutely free from oil. Before leaving the factory, Dixon's No. 095 graphite is ground into the cone surfaces, filling the pockets in the cone. Only Dixon's 095 graphite (dry) should be used when refilling of recesses in this clutch is necessary. This should be done about once a year, a small piece of cloth or waste being wrapped around the motor shaft between the cone and the motor case to prevent particles of graphite entering the motor ball bearing.

The stop drum clutch should have a drop of oil rubbed over the surfaces of washers 3 and 4, Fig. E, about once a year to preserve the friction between the stop drum 5 and ratchet case 6, Figs. E and F.

3. Commutator and Brushes

Clean commutator 8, Fig. B, occasionally with a cloth moistened with a drop of oil. Brushes 7, should

be ground with fine sandpaper to an even seat on the commutator if uneven bearing surface is noted. Do not use emery for this. Brushes should bear with about 3½ ounces pressure.

4. Stop Drum and Ratchet, (Figs. E and F)

The pinion shaft 13, Figs. B, C and E, drives the gear train through the medium of a cone clutch, Fig. C. Shaft 13 passes through the center of armature shaft 9, Fig. E. When clearing the signal, the armature torque is transmitted to pinion shaft 13, through ratchet case 10, pawl 14, Fig. F, ratchet 11, and key 12. There are two ratchet cases, 10 and 6, each carrying three pawls 14, which engage with ratchet 11. When the signal is clearing, the pawls in case 6 do not engage, so this case remains stationary.

When the semaphore has cleared, the motor circuit is opened. The pinion shaft 13 then starts to drive ratchet 11 and armature shaft 9 backward. The pawls in ratchet case 6 then engage, driving stop drum 5 backward so that motion can be arrested by stop roller 15, Fig. A, which is actuated by the slot magnet 19. Roller 15 then holds the signal in the proper position until the slot magnet is de-energized.

To reduce the impact when the backward motion of the stop drum 5 is arrested, this drum is held by a friction clutch composed of rawhide washers 3 and 4 and spring 16, all shown on Fig. E. The friction in this clutch should allow the stop drum to slip slightly when it is suddenly stopped.

By taking off cap 39, ratchet case 6 can be removed with stop drum 5 assembled. To take stop

drum apart, remove slotted washer 17, Fig. E; then all parts can be slipped from ratchet case 6. To remove ratchet case 10, screws 19 must be taken out. This necessitates removal of housing 18, Fig. B.

5. SLOT, (FIG. A)

Slot roller 15 is lifted by the armature of magnet 19 into engagement with blades on stop drum 5, thus holding the semaphore in any desired position.

Roller 15 must move freely. When 15 is lifted slightly, spring 40 must raise contact finger 41 to engage with contact 20. This contact between 41 and 20 must be closed when roller 15 is about 1/8" clear of the end of blades on stop drum 5.

When slot is de-energized, springs 21 and 40 should be under compression and stop 42 on locking pawl should rest on inside of slot housing 18. Contacts 20, 21 and 40 must be kept clean and carefully adjusted, and should have perceptible slide when compressed. *When a slot is energized there must be a minimum contact opening of* $\frac{1}{32}$" *between* 40 *and* 22. When not making contact, all springs should rest against the brass stops provided for this purpose.

Contacts 20 and 21 should never bridge, as this will short-circuit the battery. The stop plate 43 is provided to limit travel of contact finger 41, and prevent excessive bending of springs 20 and 21.

There should be no dirt or oil on the stem or between armature and pole face.

Do not oil the stem or the armature.

No oil should be applied to *any* of the slot mem-

bers unless absolutely essential to prevent rust, in which case it should be used sparingly.

Do not file off the core pins.

6. Motor, (24, Fig. B)

When clearing signal, the pinion shaft 13, Fig. E, is driven through the engagement of the pawls 14 in 10, with ratchet 11. The ratchet also allows the armature to spin freely on the down stroke after the signal has reached the stop position.

In order to reduce the strain on the gears, in case the motor overtravels so as to bring the segmental gear against the stop 25, Fig. B, at the back of the gear case, a cone clutch, Fig. C, is used, spring 26 of which should be adjusted to allow the clutch to begin to slip when a force of between one and two pounds is applied to the pinion 29 at a radius of one foot, the shaft being held rigid. Keep the cone surface free from oil, or the clutch may slip during the clearing stroke. If the clutch begins to slip and is free from oil, spring 26, Fig. C, should be drawn out a little. If the clutch is too stiff, a little dry No. 095 Dixon's graphite should be rubbed over the cone surfaces.

The complete motor and slot can be removed by unbolting motor from the gear case. To remove armature, compress spring 26, Fig. C, remove slotted washer 27, and slip off the pinion; then take off motor head 28.

Care should be taken to keep the interior of the motor free from cinders or other foreign matter which might clog the air gap.

The motor shaft should have not less than $\frac{1}{64}''$,

or more than $\frac{3}{64}$", end play. This end play may be easily observed by removing the cast iron cover for the motor brushes and commutator, and noting the play between the end of the commutator and the front head of the motor, when the armature is moved from extreme forward position to extreme back position.

End play may be reduced by adding a $\frac{1}{32}$" washer at the front end of the motor shaft adjacent to the ball bearing in the removable motor head.

7. Circuit Controller

The circut controller, Fig. J, moves through three times the arc of the semaphore shaft and in the opposite direction. The drum, carrying the segments is driven from the intermediate shaft of the signal by a spline joint 30, Fig. B, which allows the drum to be easily removed from the signal by taking out the two fillister head screws in the front plate of the controller. Any contact segment 31, Fig. J, may be shifted angularly about the shaft by loosening nut 32 and pulling the segment away from its insulating bushing 33, so as to move the corrugated surfaces on segment and bushing out of engagement. One notch in the bushing corresponds to four degrees change in segment location, or 1⅓ degrees in movement of signal blade.

A number of blank segments are generally provided and these may be cut to any desired angle after first marking the segment, before removal of the controller, with the blade at the desired angle; an index mark on segments and adjacent bushing should be made to insure that the segments are put back at

the proper angle in case the controller is taken apart for any reason.

The contact springs should not bear on their respective segments with more than one pound pressure. Steel stop springs are provided to prevent the contact springs being bent down far enough to be buckled by the segments.

Ordinary adjustments of circuit controller springs can be made by loosening the fillister head screws supporting the contact and retaining springs. For greater adjustments, shift segments on insulating bushing as described above. When necessary to increase the set in a contact spring, it should be removed from its slot and given a set toward the segment at a point 1¼″ from the slotted end. It can then be reassembled to the controller terminal board and its tension relieved by pulling it away from the segment until a pressure of not more than one pound is registered.

The pole changer contact should be kept in such adjustment as will maintain a minimum period of open circuit when polarity is reversed. This can be obtained by keeping a gap of not more than $\frac{1}{32}$″ from the flexible upper or lower springs to the rigid middle spring. This should be noted when the rigid spring is just ready to leave the opposite flexible spring and all its compression is gone. These contacts should have about $\frac{1}{32}$″ slide.

Circuit controllers should be inspected at least once a month to insure proper action of their parts.

8. Buffing

The signal is buffed when running backward by

cutting in resistance 38 in series with the motor through contact 21, Fig. A. Contact 21, Fig. A, and motor brushes 7, Fig. B, should be kept clean in order to insure good buffing.

9. Gear Case and Gears

The gear case 35 and 36, Fig. B, is dust-proof and need not be opened except in case of emergency. If, for any reason, the gearing is disassembled, care should be taken to see that the gears are properly meshed. Fig. G shows the setting for right hand, upper quadrant, 90° signals, the index marks forged on the gears coming opposite as shown when the signal is in the stop position.

Before leaving the factory, the gear teeth are given a coat of vaseline to prevent corrosion. If the signal has been stored for a long time before installation, the gears may have become rusty or gummed. This will be indicated by a squeaking or grinding noise when the signal is operated. If such a condition exists, the gears should be cleaned by applying a light oil through the motor pinion hole in the gear case, after removing the motor. Excess oil should then be drawn off by removing the plug in the bottom of the gear case.

10. Friction Torque

Torque tests are recommended as being the most direct way to determine whether the entire mechanism is working freely and safely. With a maximum torque for the semaphore spectacle and blade alone of 45 ft. lbs., the signal mechanism complete with spectacle and

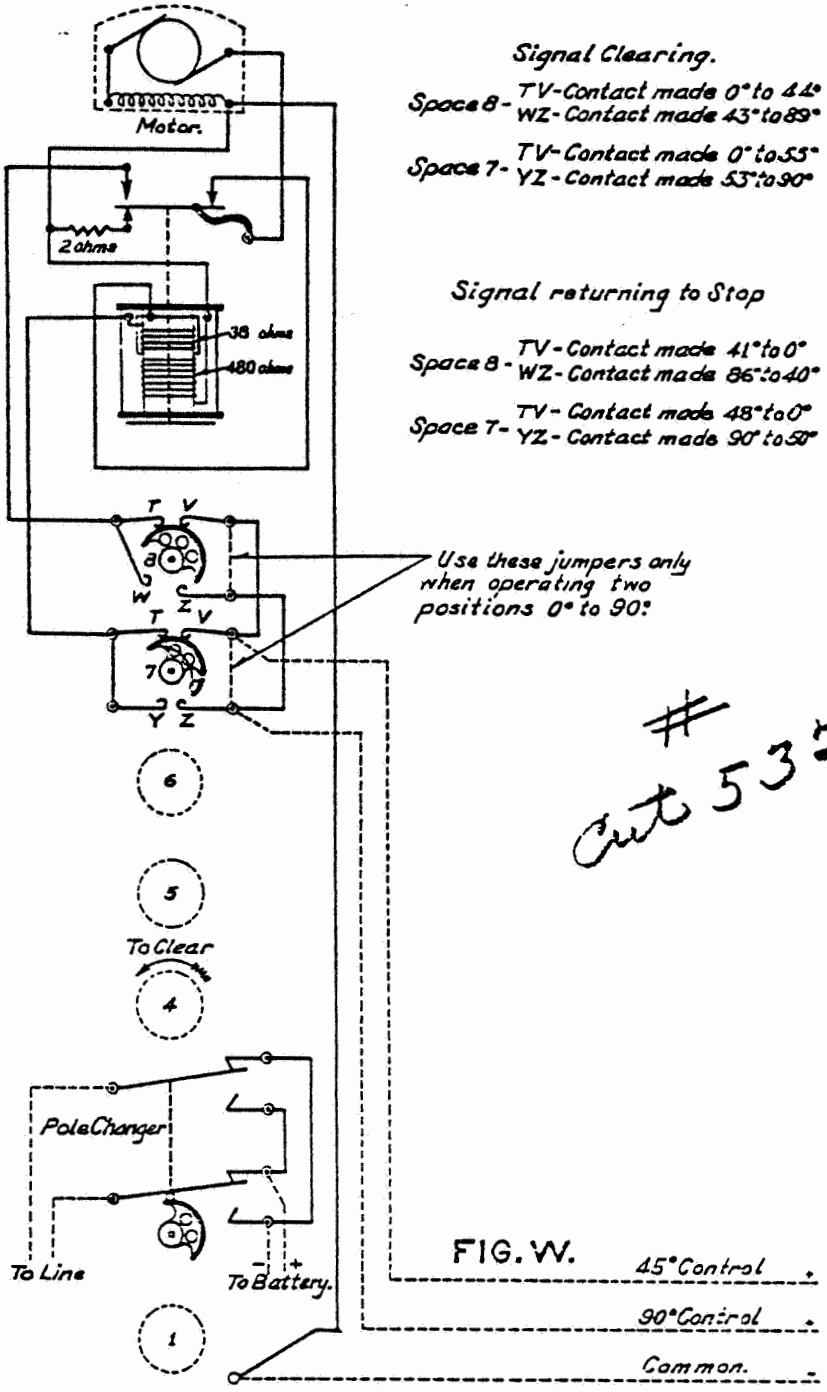

FIG. W.

Cut 5327

blade should exert a torque of at least 21 ft. lbs. when in the 90° position, and of at least 33 ft. lbs. when in the 45° position. This is the torque on the semaphore shaft. The reduced values when the mechanism is included are due to natural gear and other frictional loads.

A convenient method for measuring the torque on motor shaft is by means of a small crank having a lever arm of 1½″ from the center of a ¼″ hole to the center of a handle extending at right angles to the arm. The ¼″ hole should be fitted over the end of the ¼″ shaft 13, Fig. E, after removing cap 39. Small holes should be drilled in the crank to take the $\frac{1}{16}$″ cotter that is used to hold the cap in place. With this crank in position, the signal should be cleared to 45° and 90°, and the torque on the ¼″ shaft measured with the crank extending horizontally to the right. The signal mechanism should exert a pull downward on this crank of not less than 22.5 oz. in the 90° position, and of not less than 35 oz. in the 45° position.

Friction torque tests should be made once a year.

11. Wiring Diagrams

Wiring diagram W shows the arrangement of circuits for the control of a T-2 automatic signal. Diagram Z shows the same signal wired for Type "F" interlocking control. In each of these diagrams, only those segments of the circuit controller involved directly in the operation of the signal are shown. Detail information as to the proper setting of special contacts with which individual signals are equipped will be found on page 16.

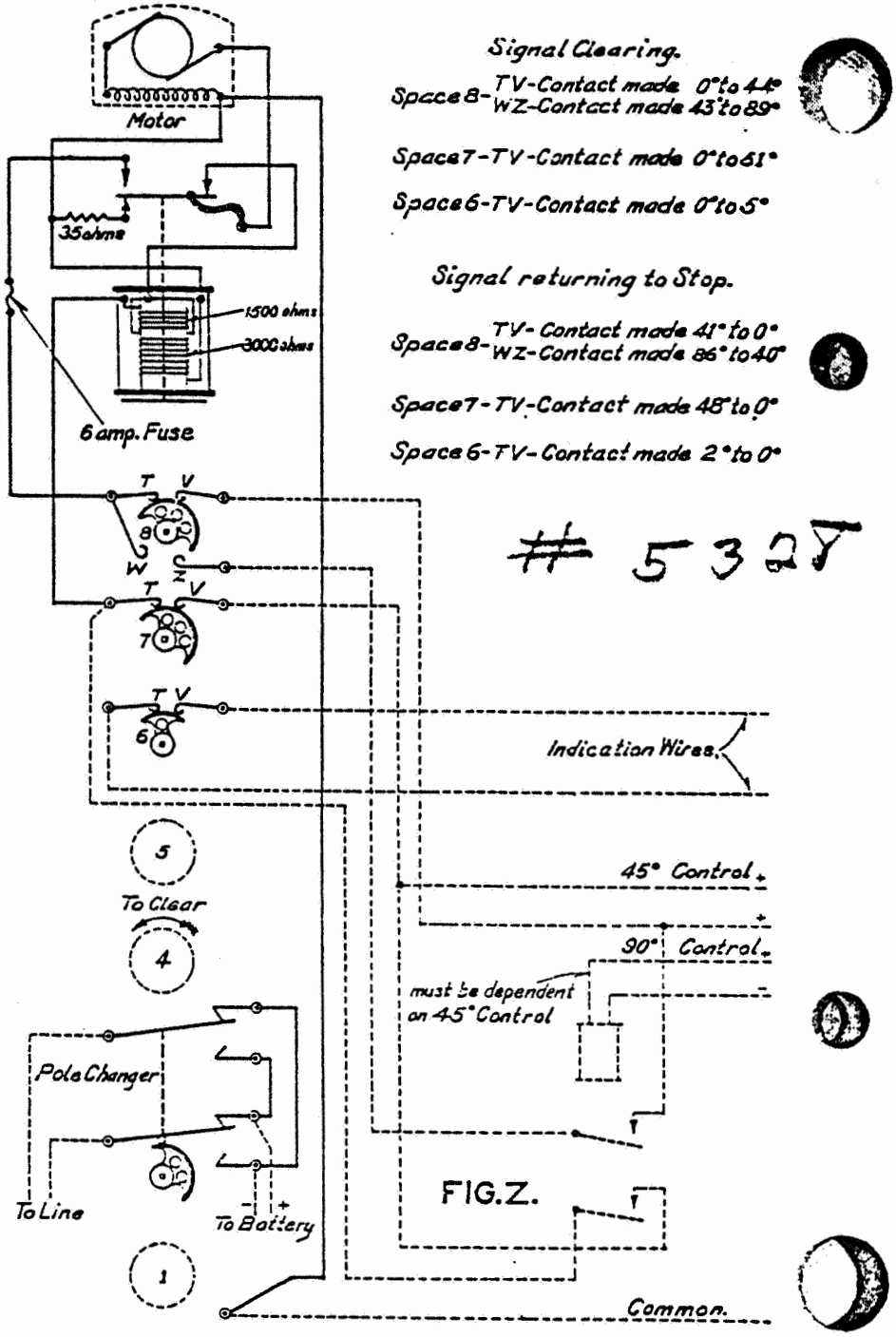
Signal Clearing.
Space 8- TV-Contact made 0° to 44°
WZ-Contact made 43° to 89°
Space 7-TV-Contact made 0° to 61°
Space 6-TV-Contact made 0° to 5°
Signal returning to Stop.
Space 8- TV-Contact made 41° to 0°
WZ-Contact made 86° to 40°
Space 7-TV-Contact made 48° to 0°
Space 6-TV-Contact made 2° to 0°
5328
Motor
35 ohms
1500 ohms
3000 ohms
6 amp. Fuse
T V
8
W Z
T V
7
T V
6
Indication Wires.
5
To Clear
4
45° Control
90° Control
must be dependent on 45° Control
Pole Changer
To Line
To Battery
1
Common.
FIG. Z.

12. Inspection

When placing signals in service and when making periodic inspections, the following points should be observed:

(a) *Lubrication.* The signal should be properly lubricated. Ball bearings require but very little oil.

(b) *Excessive Friction.* If the signal does not return promptly to the stop position when the motor and slot are de-energized, excessive friction is indicated. The cause of this friction should be immediately located and remedied.

If the signal is buffing properly, the time to drop from the 90° position to the 0° position should be approximately 8 seconds maximum. The motor may not work freely due to damage in shipment, wear, or the presence of foreign matter in its bearings, or air gap. The end play, uniformity of air gap between armature and poles, and the condition of the ball bearings should be checked if such a condition exists.

If the signal works sluggishly, with the motor removed, the bearings should be examined for the presence of foreign matter which may be preventing their free movement.

Circuit controllers should be inspected carefully to determine whether excessive tension of springs is adding too great a load. A drop of oil rubbed over the surfaces of the contact segments of the circuit controller occasionally will reduce both friction and wear on these parts.

(c) *Calibration.* The core pin length and the release voltage for the slot magnet are noted on a tag pasted on the inside of cover 37, Fig. B, of the slot housing. The release should be checked about once a year. It is obtained by operating the signal to 45° and then reducing the voltage on the holding winding until the slot lets go. If the values taken are appreciably lower than those marked on the tag, it is an indication that dirt or grease is present on the armature or armature stem, that friction has developed in the moving parts of the slot mechanism, or that core pins have worn so as to reduce the air gap.

Low release is also obtained if spring 40, Fig. A, is engaged with 22 when the slot magnet is energized. This contact should not make until roller 15 has dropped below the point where it holds the blades 5 of the stop drum.

DISTRICT OFFICES:

CHICAGO - - - - -	Peoples Gas Building
MONTREAL - - - -	Transportation Building
NEW YORK - - - -	Westinghouse Building
ST. LOUIS - - -	Railway Exchange Building
SAN FRANCISCO - - - -	Matson Building

Represented by the GENERAL ELECTRIC COMPANY *in South Africa and Argentina.*